ValNac

Safety Valves

www.valnacsafety.com

3400 Breather Valve

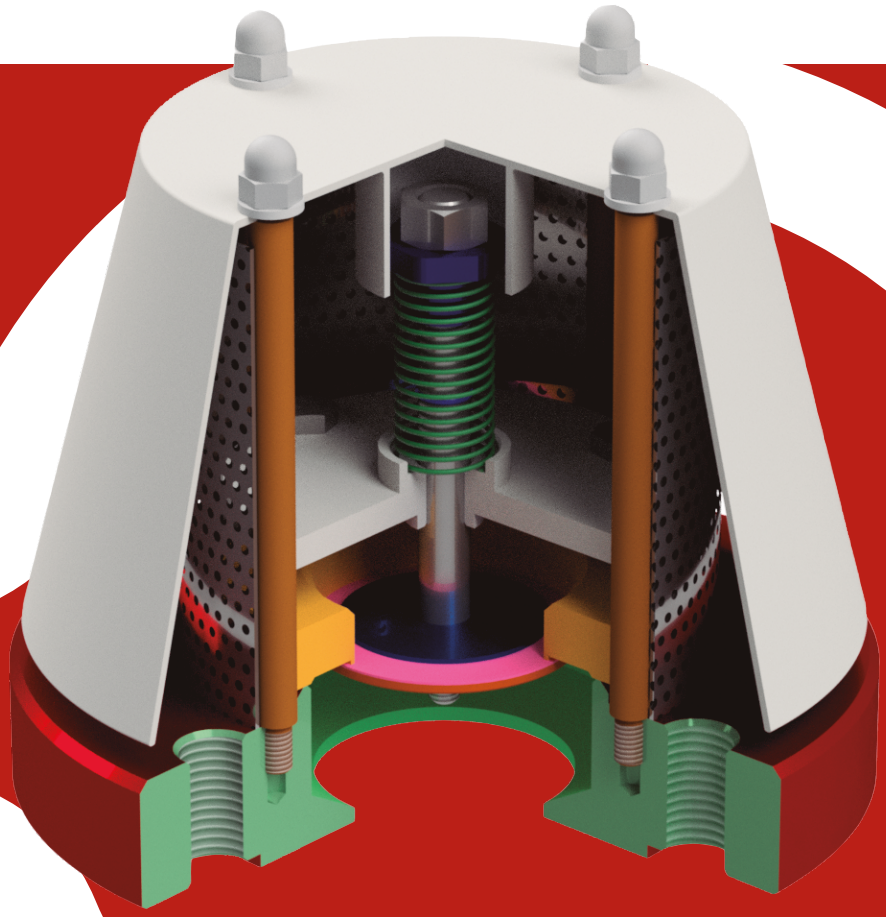

Making excellence
something personal

Production, R+D+I, Evolution

ValNac, Safety Valves was established in Spain in 1976. The main target was to assist the petrochemical and chemical industries emerging in Spain at that time. Right from the start ValNac, Safety Valves, has been designing and producing safety valves according to most recognized international standards and norms: API, ASME, ASTM and the European directives 2014/68/UE and 2014/34/UE. Our production process is accredited by an ISO 9001-2016 certification.

Our know how and capacity to adapt to the constantly changing demands of the market, made possible the introduction of new products designed for new applications on the market, like THERMOSOLAR PLANTS, where ValNac, Safety Valves has supplied safety valves to more than 31 complete plants all over the world, while at the same time continuously supplying to all main players of the Spanish petrochemical, chemical and refining industries.

Production capacity

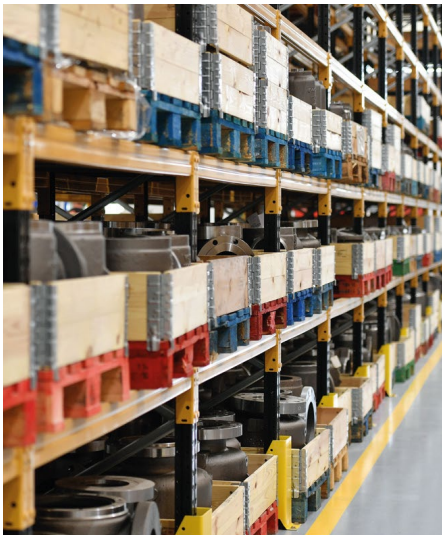

ValNac, Safety Valves valves' have their discharge coefficients approved in laboratory tests, in order to guarantee and assure that correct values are being used for every sizing process.

In our Technical sales department we count with a modern software which allows us to verify all the possibilities, and to assure strict fulfillment of all international standards.

ValNac, Safety Valves has established representation agreements with the most important O.E.M. companies in the safety sector of the industry, consolidating us as one of the main companies by product range; design and consulting in new plants or in new process.

Our continuous growth, shows a clear trend, which confirms the integration of our workers to provide first class service to our customers and partners.

Factory & Location

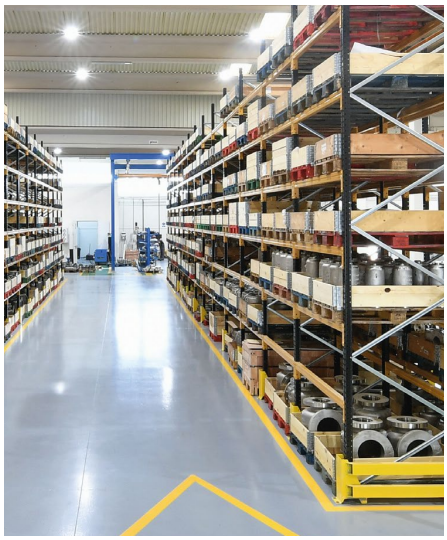

Our facilities in Rubí (Barcelona - Spain), with more than 3.000 Sq m are fully prepared for our production activities: machining with modern CNC, assembling and testing. We also have long term agreements with approved workshops, which provides us with flexibility and fast feedback to customers demands, with full quality guarantee which has always been our main target.

Strategic alliances

Nowadays ValNac, Safety Valves starts an internationalization process, establishing representation agreements in different countries and continents all over the world, with specialized companies that will provide added value in our service towards the end user.

ValNac, Safety Valves Making safety since 1976!

Index

GENERAL FEATURES & DESCRIPTION 04

MODELS AND CONNECTIONS 05

DIMENSION 06

BILL OF MATERIALS 07

General Features

Product Introduction

The model 3400, is a pressure relief valve for overpressure and vacuum. This valve has flanged and threaded connections. This valve is categorized in three different types: Breather, Vacuum and Breather/Vacuum combined.

Types:

MODELS 3410/3420/3430
Breather / Vacuum valve spring loaded (vacuum) andweight loaded (Brather)

Model 3410/3420/3430 valves are comprised of a body with a vent connection, regulated by two stainless Steel discs. The same connection serves to relieve negative pressures, vacuum conditions, and pressure. When the tank condition exceeds the pressures at which the valve is calibrated, either in vacuum on in overpressure, the corresponding disc will act, relieving and normalizing the pressures inside the tank. Once normalized, the discs remain in rest position closing the connections. The weight of the pressure disc is proportionally related to the set pressure of the valve and the adjustment of the spring tension for the vacuum disc with the vacuum pressure. In the event of a subsequent change in the valve setting at higher pressures values, more counterweight discs can be added to the guide until reaching the desired setting or the spring can be adjusted more or less until reaching the desired set pressure for the vacuum situation.

Product Introduction

European Directive:	2014/34/UE (ATEX)
Quality System:	EN ISO 9001:2015
Materials:	ASME/ASTM & EN

Sizes and Ratings

ASME B16.5:

Sizes:	2” To 10”
Rating:	150#

EN/ISO 1092-1:

Sizes:	DN50 To DN250
Rating:	PN10

Description

Model 3400 are breather valves that have been designed for installation and protection of tanks against positive and negative pressures (breather / vacuum) due to loading and unloading operations in tanks or vessels and variations in temperature. When the tank pressure exceeds the valve set pressure, for positive and/or negative pressure, the discallows fluid relief from the tank. These valves are installed at the top of the tank at 10 times the diameter of pipe at the end of the vent.

MODELS 3411/3421/3431
Vacuum valve – Spring loaded

Model 3111/3421/3431 valves consist of a body with a vent connection, regulated by a stainless-steel disc. When the tank in vacuum condition exceeds the set pressure at which the valve is set, the disc act to relieve and normalize the pressures inside the tank. Once normalized, the disc remains in rest position, closing the connection.

MODELS 3412/3422/3432
Breather valve – Weight loaded

Model 3412/3422/3432 valves are comprised of a body with a vent connection, regulated by a stainless-steel disc. When the overpressure condition of the tank exceeds
the set pressure at which the valve is set, it will act to relieve and normalize the pressures inside the tank. Once normalized, the disc remains in rest position, closing
the connection. The weight of the pressure disc is proportionally related to the set pressure of the valve, In the event of a subsequent change in the valve setting at higher pressure values, more counterweight discs can be added to the guide untilreaching the desired setting.

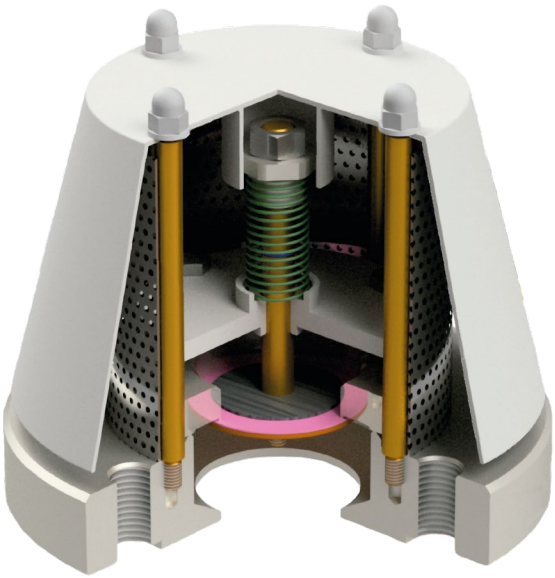

Models & Connection

Breather / Vacuum

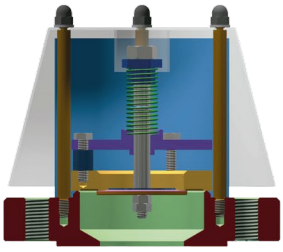

3410 – Flanged

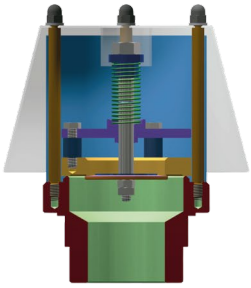

3420 – Threaded

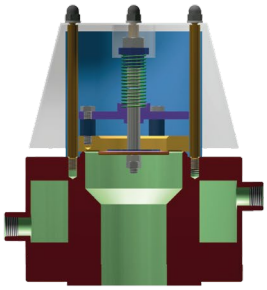

3430 – Heating Jacket

Vacuum type

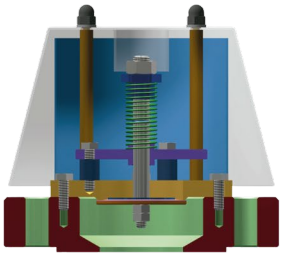

3411 – Flanged

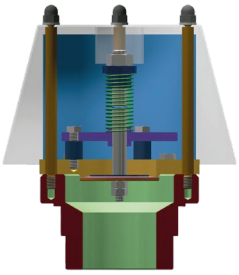

3421 – Threaded

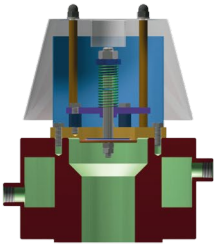

3431 – Heating Jacket

Breather type

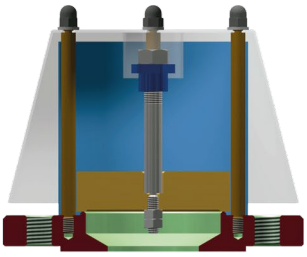

3412 – Flanged

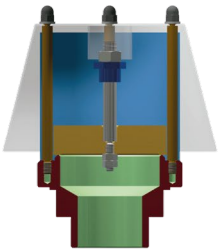

3422 – Threaded

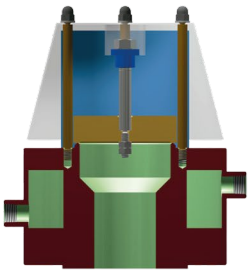

3432 – Heating Jacket

Dimensions

SIZE	FLANGED CONNECTION			
	A (mm)	B (mm)	C* (mm)	D (mm)
2"	160	150	152	190
DN50	160	165	152	190
3"	208	190	184	257
DN80	208	200	184	257
4"	263	230	263	295
DN100	263	220	263	295
6"	346	280	346	384
DN150	346	285	346	384
8"	383	445	383	467
DN200	383	340	383	467
10"	280	405	250	590
DN250	280	395	250	590

(*) Dimension only for breather type 3412

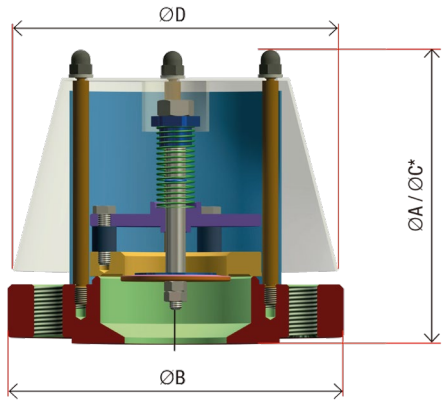

SIZE	THREADED CONNECTION			
	E (mm)	F (BSPP)	G (mm)	H (mm)
2"	48	2"	197	190
DN50	50	2-1/2"	197	190

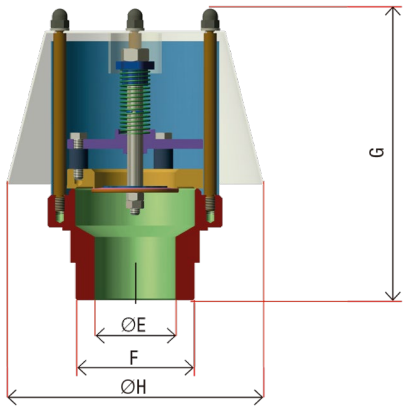

SIZE	HEATING JACKET				
	I (mm)	J (mm)	K (mm)	L (mm)	M (mm)
2"	200	150	190	68	45
DN50	200	165	190	68	45

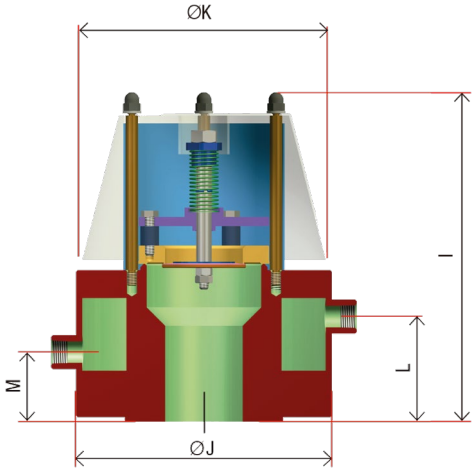

Bill of Materials

3410 / 3420 / 3430 Material List

ITEM	DESCRIPTION	MATERIAL
1	BODY	AISI 316
2	WEIGHT	AISI 316
3	PRESSURE DISC	AISI 316
4	VACUUM DISC	AISI 316
5	WASHER	AISI 316
6	PROTECTIVE NET	AISI 304
7	STEM	AISI 316
8	ADJUSTING SCREW	AISI 316
9	PERIPHERICAL GUIDES	AISI 316
10	STOPPER	AISI 316
11	HEXAGONAL DOMED CAP NUT	AISI 304
12	WASHER	AISI 316
13	HEXAGONAL HEAD BOLT	AISI 304
14	GASKET	PTFE
15	SPRING	AISI 302
16	HEXAGONAL NUT	AISI 304
17	HEXAGONAL NUT	AISI 316
18	LOCKING RING	AISI 302
19	PROTECTIVE COVER	AISI 304

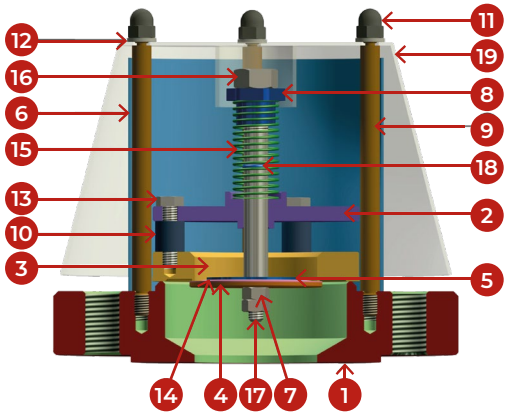

3411 / 3421 / 3431 Material List

ITEM	DESCRIPTION	MATERIAL
1	BODY	AISI 316
2	GUIDE	AISI 316
3	PRESSURE DISC	AISI 316
4	VACUUM DISC	AISI 316
5	WASHER	AISI 316
6	PROTECTIVE NET	AISI 304
7	STEM	AISI 316
8	ADJUSTING SCREW	AISI 316
9	PERIPHERICAL GUIDES	AISI 316
10	STOPPER	AISI 316
11	HEXAGONAL DOMED CAP NUT	AISI 304
12	WASHER	AISI 316
13	HEXAGONAL HEAD BOLT	AISI 304
14	GASKET	PTFE
15	SPRING	AISI 302
16	HEXAGONAL NUT	AISI 304
17	HEXAGONAL NUT	AISI 316
18	LOCKING RING	AISI 302
19	PROTECTIVE COVER	AISI 304
20	HEXAGONAL NUT	AISI 304

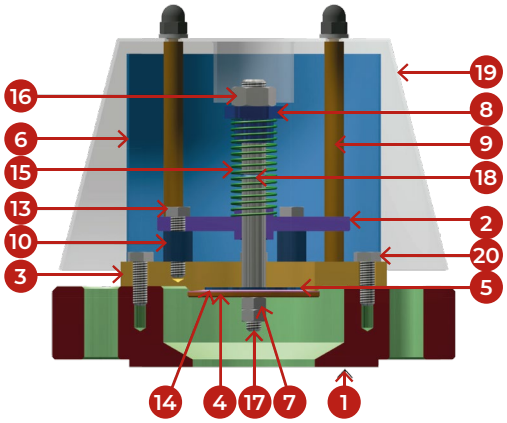

3411 / 3421 / 3431 Material List

ITEM	DESCRIPTION	MATERIAL
1	BODY	AISI 316
2	HEXAGONAL NUT	AISI 316
3	WASHER	AISI 316
4	PRESSURE DISC	AISI 316
5	PERIPHERICAL GUIDES	AISI 316
6	ADJUSTING SCREW	AISI 304
7	HEXAGONAL NUT	AISI 304
8	PROTECTIVE NET	AISI 304
9	HEXAGONAL DOMED CAP NUT	AISI 304
10	PROTECTIVE COVER	AISI 304
11	STEM	AISI 304

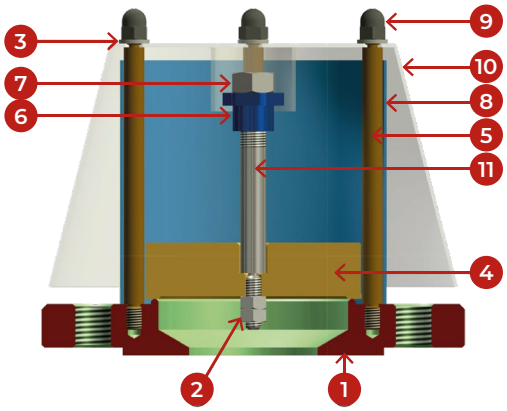

Making safety since 1976

MOD-6400 ASME UV

SAFETY VALVE

MOD-5100 ASME UV

SAFETY VALVE

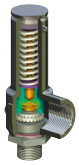

MOD-3-50

SAFETY VALVE

MOD-3-51

SAFETY VALVE

MOD-5500

SAFETY VALVE

PILOT OPERATED

SAFETY VALVE

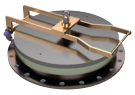

MOD-2000

EMERGENCY VALVE

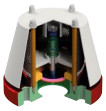

MOD-3400

BREATHER VALVE

VALVE SILENCER

ValNac
Safety Valves

Sales & Headquarters:
Rec del Molinar, 9-P-I. El Circuit
08160 Montmeló (Barcelona) - Spain
synerkos@synerkos.com