ValNac

Safety Valves

www.valnacsafety.com

5500

Making excellence
something personal

Production, r+d+i, evolution

ValNac, Safety Valves was established in Spain in 1976. The main target was to assist the petrochemical and chemical industries emerging in Spain at that time. Right from the start ValNac, Safety Valves, has been designing and producing safety valves according to most recognized international standards and norms: API, ASME, ASTM and the European directives 2014/68/UE and 2014/34/ UE. Our production process is accredited by an ISO 9001-2015 certification.

Our know how and capacity to adapt to the constantly changing demands of the market, made possible the introduction of new products designed for new applications on the market, like THERMOSOLAR PLANTS, where ValNac, Safety Valves has supplied safety valves to more than 31 complete plants all over the world, while at the same time continuously supplying to all main companies of the Spanish petrochemical, chemical and refining industries.

Production capacity

ValNac, Safety Valves have their discharge coefficients approved in laboratory tests, in order to guarantee and assure that correct values are being used for every sizing process.

In our Technical sales department we have a modern software which allows us to verify all the possibilities, and to assure strict fulfillment of all international standards.

ValNac, Safety Valves has established representation agreements with the most important O.E.M. companies in the safety sector of the industry, consolidating us as one of the main companies by product range; design and consulting in new plants or in new process.

Our continuous growth, shows a clear trend, which confirms the integration of our workers to provide first class service to our customers and partners.

Factory & location

Our facilities in Rubí (Barcelona - Spain), with more than 3.000 Sq m are fully prepared for our production activities: machining with modern CNC, assembling and testing. We also have long term agreements with approved workshops, which provides us with flexibility and fast feedback to customers demands, with full quality guarantee which has always been our main target.

Strategic alliances

Nowadays ValNac, Safety Valves is an international company, with representation agreements in different countries and continents all over the world, with specialized companies that will provide added value in our service towards the end user.

ValNac, Safety Valves Making safety since 1976!

Index

GENERAL FEATURES 04

PARTS LIST 05

BILL OF MATERIALS 06

OPTIONS 07

GENERAL DIMENSIONS 08

MAIN COMPONENTS 09

DEFINITIONS (EN ISO 4126-1) 10

General Features

The model 5500, is an angular type safety valve at 90° between the inlet and the outlet connections, with flanged connections, semi nozzle, direct action and spring loaded. It is designed with the same trims to work with gases and vapours or liquids.

Design

- Valve body is angular type at 90° between inlet and outlet flanges.
- Simplicity of construction, resulting in a valve with high reliability and easy maintenance.
- Self-aligning disc system with guide separated from the valve body, resulting an excellent tightness after valve opening.
- Springs are designed using a tested and highly reliable calculation software and manufactured with the ideal material qualities for the process conditions, ensuring elasticity and accurate repetition of valve opening

Codes and standards

Valves have been designed and manufactured in compliance with the following directives, codes and standards:

European Directive	97/23/CE (PED) 94/9/CE (ATEX)
Design	EN ISO 4126-1/ASME VIII DIV.1 / ASME XIII
Certifications	PED MODULE B+D
Pressure and Temperature Rating	EN 12516-1 & ASME B16.34
Tests	API-527 & ISO 4126-1
Quality System	EN ISO 9001:2008
Materials	EN & ASTM/ASME

Sizes and ratings

Standard sizes and ratings:

EN/ISO	
Sizes	DN-20xDN-32 up to DN-150xDN-250
Rating	PN-16 up to PN-40

ASME	
Sizes	¾” x 1 ¼” up to 6”x 10”
Rating	150# up to 300#

Parts list

CONVENTIONAL VALVE

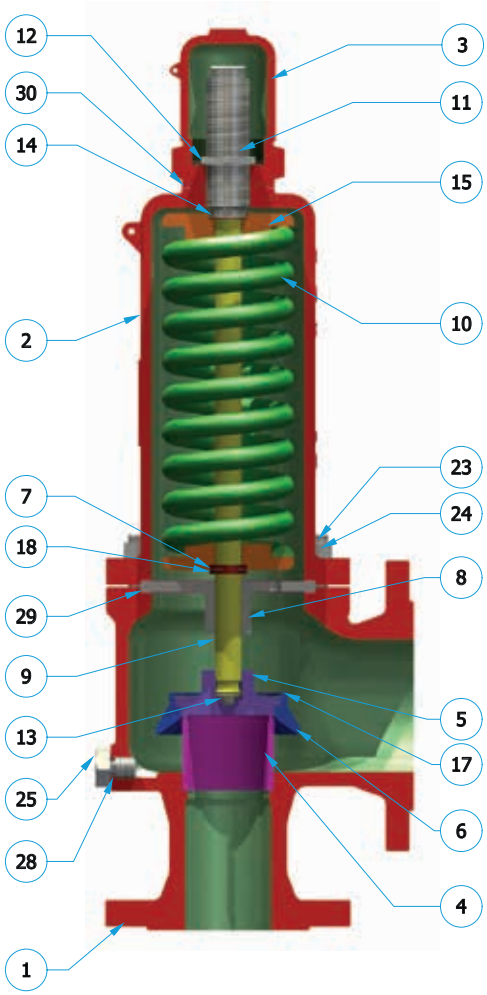

PLAIN LEVER

PACKED LEVER

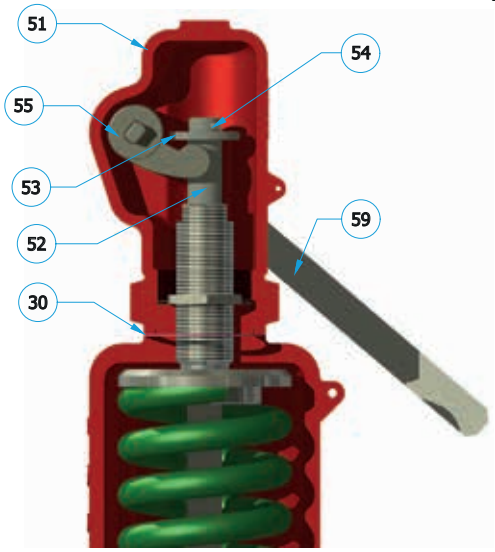

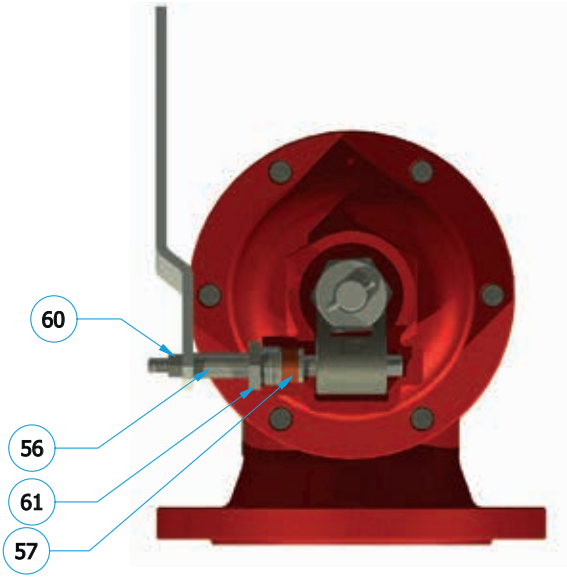

Bill of Materials

	CLASS	F	E
ITEM	DENOMINATION	-29°C TO 425°C	-196°C TO 400°C
1	BODY	1.0619	1.4408
2	BONNET	1.0619	1.4408
2A	OPEN BONNET	1.0619	-
3	CAP	1.0619	1.4408
4	NOZZLE	See sub class	1.4401
5	DISC		1.4401
6	DISC HOLDER	1.4006	1.4401
7	ELASTIC RING	1.4401	1.4401
8	GUIDE	1.4001	1.4401
9	STEM	1.4021	1.4401
10	SPRING	50CRV4	1.4401 (1)
11	ADJUSTING SCREW	1.4021	1.4401 Nitrided
12	ADJUSTING SCREW NUT	1.4401	1.4401
13	SPHERE	1.4021	1.4401
14	FRICTION WASHER	1.4401	1.4401
15	SPRING BUTTON	1.0460+Fe/Zn5C	1.4401
17	LOCKING RING	1.4401	1.4401
18	RING	1.4401 / AISI 316	1.4401
23	STUD	1.7225+Fe/Zn5C	1.4401 (A4-70)
24	NUT	1.0503+Fe/Zn5C	1.4401 (A4-70)
25	PLUG	1.4401	1.4401
28	PLUG GASKET	Graphite+316SS	Graphite + 316SS
29	GUIDE GASKET	Graphite+316SS	Graphite + 316SS
30	CAP GASKET	Graphite+316SS	Graphite + 316SS
43	PIN	DIN 94 A2	DIN 94 A2
51	LEVER CAP	1.0619	1.4408
52	LEVER STEM	1.4021	1.4401
53	NUT	1.0460+Fe/Zn5C	1.4401
54	NUT	1.4401	1.4401
55	CAM	1.4404	1.4404
56	LEVER SHAFT	1.4021	1.4401
57	PACKING	BRAID GRAPHITE	BRAID GRAPHITE
59	LEVER	1.0460+Fe/Zn5C	1.0460 + Fe/Zn5C
60	NUT	1.0503+Fe/Zn5C	1.4401 (A4-70)
61	PACKING GLAND	1.0460+Fe/Zn5C	1.4401
70	OPEN LEVER CAP	1.0619	-
71	OPEN CAP LEVER	1.0619	-
72	OPEN CAP SHAFT	1.4021	-

(1) Inconel X-750 material for T>300°C
(2) T.S. material for T>232°C

	DENOMINATION	METAL-METAL SUB CLASS	
SC	SUB CLASS CODE	13	1
STS	SUB CLASS DESIGN TEMP.	-29 ÷ 425 °C	-196 ÷ 538 °C
4	NOZZLE	1.4006	1.4001
5	DISC	1.4006	1.4001

ValNac
Safety Valves

Options

TEST-GAG

PACKED LEVER

PLAIN LEVER

HEATING JACKET

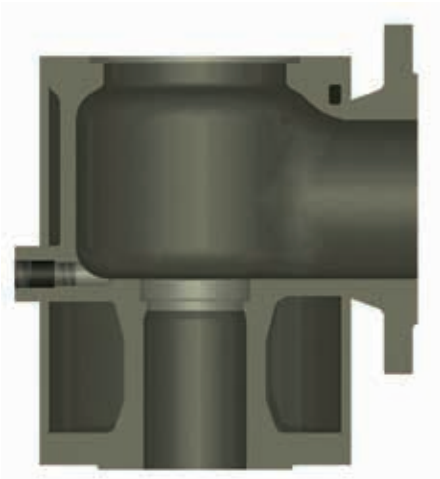

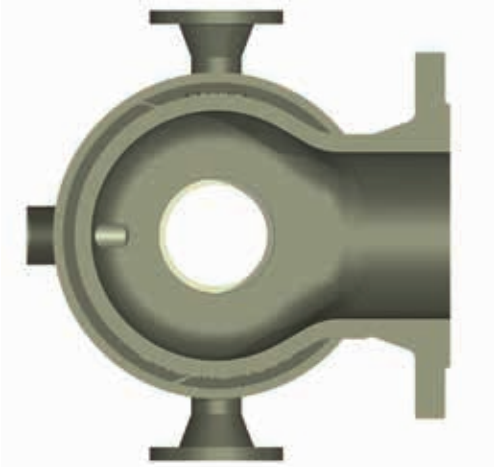

General Dimensions

Orifice (ø mm)	Rating	Inlet	Outlet	Flow Area (cm^2)	General Dimensions					Standard	Lever
					A	B	C	E	F	Weight - (Kg)	
18											
	PN16÷40 x PN16	DN20	DN32	2,54	85	95	294	90	339	7,3	8
23											
	PN16÷40 x PN16	DN25	DN40	4,15	105	100	344	90	389	10,4	11,1
29											
	PN16÷40 x PN16	DN32	DN50	6,61	115	110	396	90	446	13,2	14
37											
	PN16÷40 x PN16	DN40	DN65	10,75	140	115	479	90	529	17,9	18,6
47											
	PN16÷40 x PN16	DN50	DN80	17,35	150	120	561	100	611	24,8	25,8
60											
	PN16÷40 x PN16	DN65	DN100	28,27	170	140	682	120	732	40,5	41,7
75											
	PN16÷240 x PN16	DN80	DN125	44,18	195	160	732	120	792	43,8	45,2
95											
	PN16÷40 x PN16	DN100	DN150	70,88	220	180	896	150	956	96,7	98,8
106											
	PN16÷40 x PN16	DN125	DN200	88,25	250	200	996	150	1066	124,5	127,3
125											
	PN16÷40 x PN16	DN150	DN250	122,72	285	225	1159	150	1229	155,5	159,8

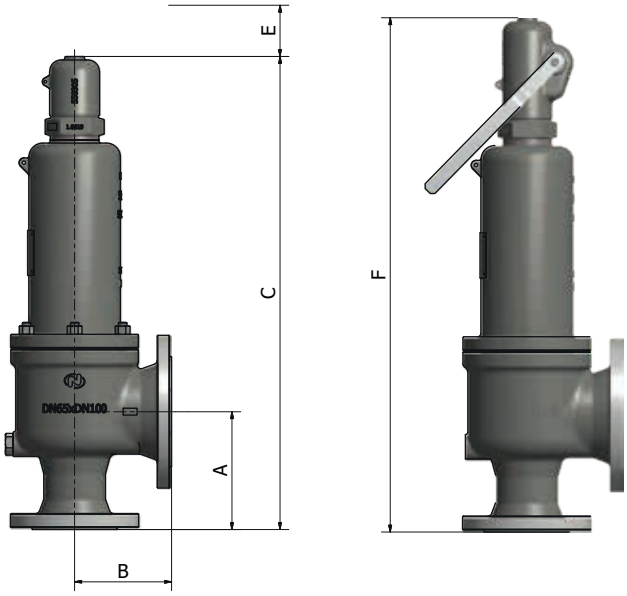

Main Components

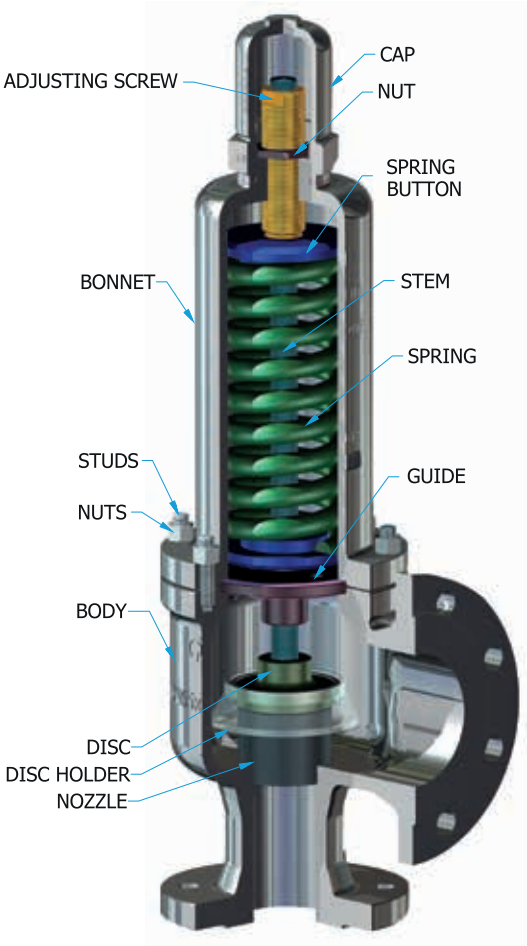

Technical Information / Operating technical characteristics table

SAFETY VALVE MODEL 5500

SERVICE			GAS	LIQUID
DISCHARGE COEFFICIENT	(1)	Kd	0,895	0,696
BLOWDOWN			10%	20% (2)
VARIABLE BACKPRESSURE	(3)	MAX.	10%	
SET PRESSURE RANGE	bar g		0,3 ÷ 40	

(1) 10% Overpressure or 0,1 bar whichever is greater
(2) or 0,6 bar, whichever is greater
(3) Maximum allowable backpressure without overpressure exceeds 10%

Definitions (EN ISO 4126-1)

Blowdown: The difference between the set and re-seating pressures, normally stated as a percentage on the set pressure of a safety valve except for pressures of less than 3 bar when it is expressed to operate.

Built-up back pressure: The pressure existing at the outlet of the safety valve caused by flow through the valve and the discharge system.

Coefficient of discharge: The value of actual flowing capacity (from tests).

Cold differential test pressure: The inlet static pressure at which a safety valve is set to initiate to open on the test bench. This test pressure includes corrections for service conditions, as back pressure and/or temperature.

Flow area: The minimum cross-sectional flow area (but not the curtain area) between inlet and nozzle which is used to calculate the theoretical flow to discharge.

Flow diameter: The diameter corresponding to the flow area.

Lift: The actual travel of the valve disc starting from the closed position.

Maximum allowable pressure: The maximum pressure for which the equipment is designed as specified by the manufacturer.

Overpressure: A pressure increase over the set pressure, at which the safety valve achieves the lift specified by the manufacturer, usually expressed as a percentage of the set pressure.

Pressure: The pressure unit used in this standard is the bar (1 bar = 105 Pa). It is quoted as gauge (relative to atmospheric pressure) or absolute as appropriate.

Relieving pressure: The pressure used for the sizing of the safety valve which is greater than or equal to the set pressure plus the overpressure.

Re-seating pressure: The value of the inlet static pressure at which the disc re-establishes contact with the seat or at which the lift becomes zero.

Safety valve: Valve which automatically, without the assistance of any energy other than that of the fluid concerned, discharges aquantity of the fluid so as to prevent a predetermined safe pressure being exceeded and which is designed to re-close and prevent further flow or fluid after nominal pressure conditions of service have been restored.

Set pressure: The predetermined pressure at which a safety valve under operating conditions initiates to open.

Superimposed back pressure: The pressure existing at the outlet of the safety valve at the time when the device is required to operate.

VALVE 5500

Safety valve specially designed to work with gases, vapor or liquids for industrial applications

Making safety since 1976

MOD-6400 ASME UV

SAFETY VALVE

MOD-5100 ASME UV

SAFETY VALVE

MOD-3-50

SAFETY VALVE

MOD-3-51

SAFETY VALVE

MOD-5500

SAFETY VALVE

PILOT OPERATED

SAFETY VALVE

MOD-2000

EMERGENCY VALVE

MOD-3400

BREATHER VALVE

VALVE SILENCER

ValNac
Safety Valves

Sales & Headquarters:
Rec del Molinar, 9-P-I. El Circuit
08160 Montmeló (Barcelona) - Spain
synerkos@synerkos.com